FliteTop®

STRAIGHT RUNNING CHAIN WITH RUBBER SURFACE

G 815 SERIES - SINGLE HINGE

Reference	Standard Materials P
G 815	

Pad Material: Nitrile rubber (see page 36).
Pin Material: Cold rolled austenitic stainless steel

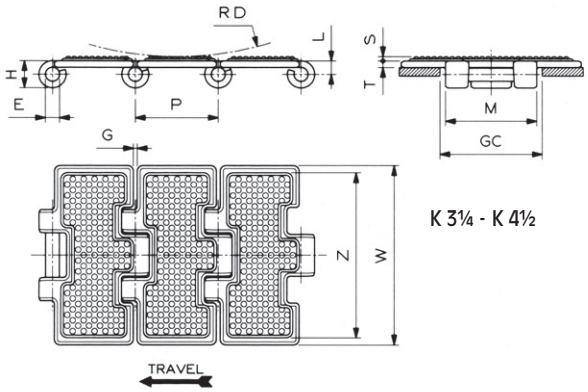

K 3¼ - K 4½

Dimension	mm	inches
P	38,1	1.5
T	3	.118
S	2	.079
M	42	1.654
L	6,4	.252
H	13	.512
E	6,35	.25
Z	76	2.992
RD	150	5.906
GC	44	1.732

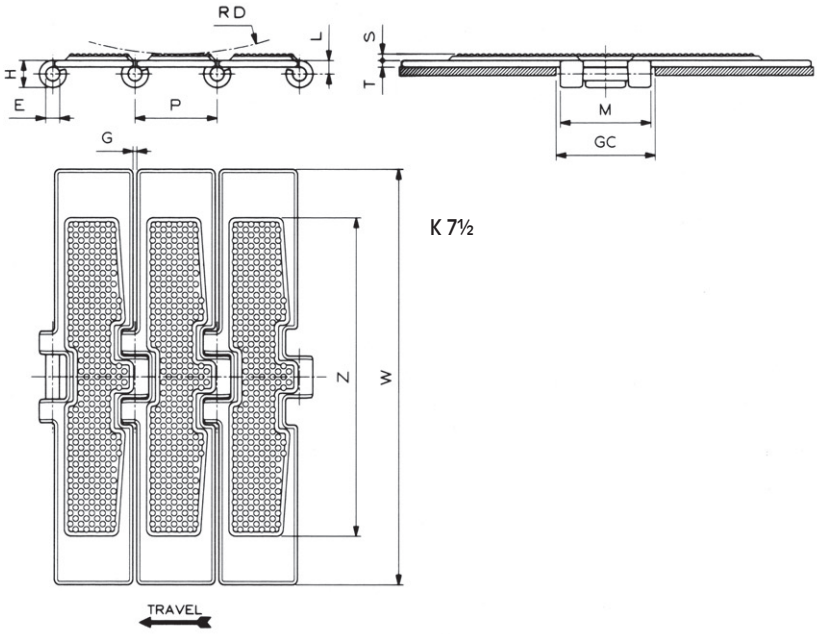

K 7½

Dimension	mm	inches
P	38,1	1.5
T	3	.118
S	2,8	.11
M	42	1.654
L	6,4	.252
H	13	.512
E	6,35	.25
Z	146	5.748
RD	150	5.906
GC	44	1.732

G 815 (Straight Running - Rubber Surface)

Chain material see page 12
Sprockets and Idler wheels see pages 172÷178
Sprocket positioning see page 299

MATERIAL	REGINA REF.	CHAIN WIDTH W		GAP G		YIELD LOAD AVERAGE		CHAIN WEIGHT	
		mm	inches	mm	inches	N	lbs	kg/m	lbs/ft
PRIMA (P)	PG 815 K 3 ¼	82,6	3.25	1,8	0.071	8500	1,913	2,66	1.79
	PG 815 K 4 ½	114,3	4.50	1,8	0.071	8500	1,913	3,37	2.26
	PG 815 K 7 ½	190,5	7.50	1,8	0.071	8500	1,913	5,24	3.52

Standard length: 3,048 m (10 feet)